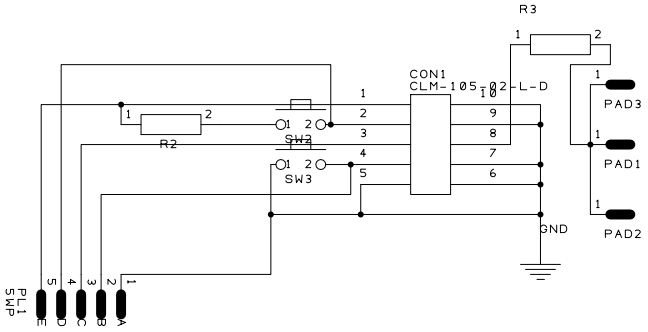

Sheet	Drawing No.	Title	Drwn by
of		LED Pocketwatch - top	